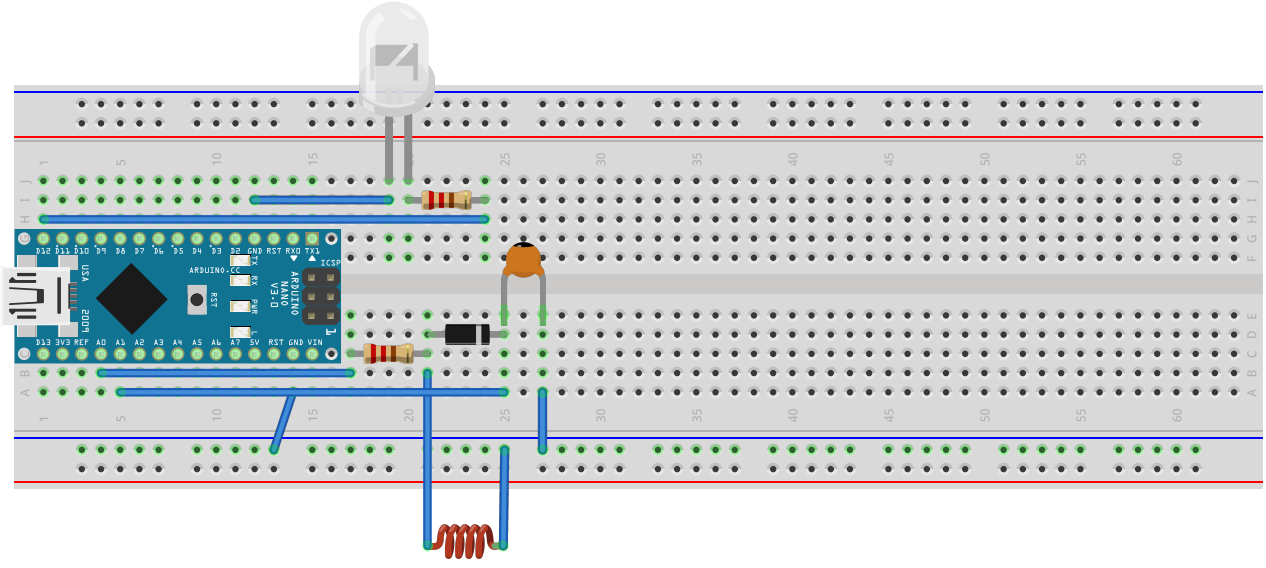
fritzing